WZ 600mm Waterless Stockpots

Technical Specifications for WZ-1SP



CHEFS DEPOT
Culinary Supplies

ASIAN

- Space saving 800mm depth
- Suitable for use with Luus 165lt stockpot
- Duckbill burners ideal for adjusting flame strength
- Air gap design eliminates need for water cooling
- Cast iron trivet aids airflow and burner combustion
- Machine pressed deck to prevent grime catchment
- Concealed ring lip prevents water from entering air gap
- Rear laundry arm with front panel controls
- Optional Chimney Burners no additional cost
- 24 month 'Platinum Warranty'
- Easy to clean and service

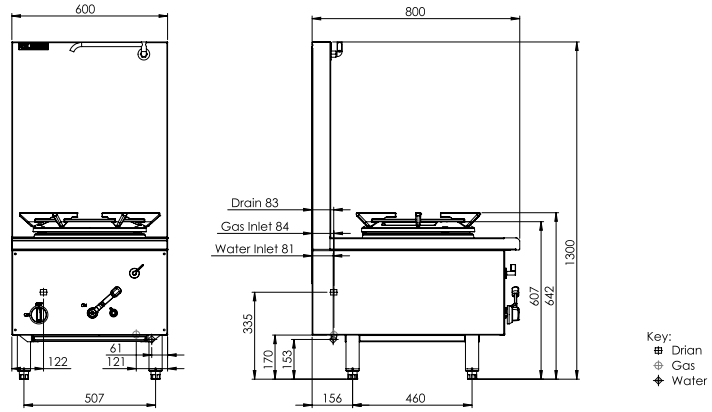



Model	Description	Nat Gas	LP Gas
WZ-1SP	1 duckbill burner stockpot	90 mj	90 mj

Waterless Stockpot
- 90 mj 18 jet duckbill burners with pilot & FFD
- Supplied with heavy duty cast iron trivet
- Air gap cooling system
- Quarter turn water control lever
- Rear laundry arm with front panel controls
- Front gutter design for easier cleaning
- Internal front heat shield panel
- Zinc-aluminium Alloy burner handles

Overall Construction
- Heavy duty construction
- Full skirt, enamelled cast-iron rings
- 1.5mm 304 stainless steel one-piece pressed deck
- 0.9mm 304 stainless steel condiment shelf
- Splashback and front cover 1.2 mm 304 stainless steel
- Integrated hob 1.5mm 304 stainless steel
- Side panels 1.2mm 304 stainless steel
- Undertrays 0.9mm stainless steel
- Stainless steel removable legs
- 30mm height adjustment range

Dimensions
- 600mm x 800mm x 1300mm H
- Working height 665mm
- Weight 85kg
- Packed dimensions 650mm x 900mm x 1470mm H
- Packed weight 110kg

Connections
- Gas 3/4" BSP female
- Gas 121mm from right, 84mm from rear, 170m to floor
- Supplied with gas regulator (specify Nat or LP on order)
- Water inlet 1/2" copper tube
- Water 61mm from right, 81mm to rear, 153mm to floor
- Drain 1 3/4" BSP male, drain outlet 2"
- Drain 122mm from left, 83mm from rear, 335mm to floor

Cleaning & Servicing
- Easy access to all parts & components from front

Options/Accessories
- 165lt S/S pot with release valve
- Knee lever timer tap
- Replace Duckbill burners with Chimney burners
- 250mm and 500mm wide clip on shelves (front)
- Injector Cleaning Tool
- Joining caps & strips
- RH and LH side shields
- Rear castors

Luus Industries Pty Ltd | (03) 9240 6822 | sales@luus.com.au | www.luus.com.au

AUSTRALIAN MADE AND OWNED

24 MONTHS PLATINUM WARRANTY

AGA