GIORIK
INNOVATIVE COOKING EQUIPMENT SINCE 1963

CHEFS DEPOT
Culinary Supplies

FLG72GCRXT

Frytop - Gas, Satin Chrome, Smooth Plate / Open Base

700



Product Information:

- Class leading, European style, professional quality and reliability since 1963
- 700 series, gas frytop with 15mm smooth satin chrome plate (25 MJ/h)
  (also available in 15mm ribbed satin chrome plate)
- Satin chrome plate delivers a cost effective, highly durable, faster heating and easier cleaning solution than alternative plates
- Piezo ignition burners with flame failure device and pilot burner complete with Hi-limit temperature protection
- Temperature regulation via thermostat (90°C – 280°C)
- Robust 304 grade stainless steel construction with rounded corners for improved cleaning
- Hermetically sealed, pressed work surface with raised edges to protect from overflow
- Removable 1/3 GN grease tray
- Open base with optional door available (SPGI.2016437)
- Height adjustable stainless steel feet for a 900mm working height
- 24-month warranty

General Drawing:

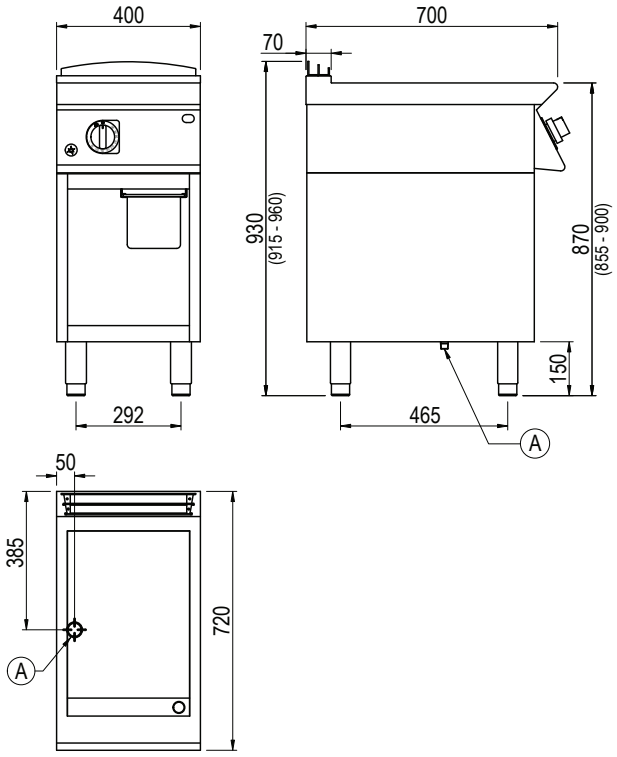

Specifications:

Model - Smooth	FLG72GCRXT
Model - Ribbed	FRG72GCRXT
W x D x H (mm)	400 x 720 x 930
Weight	60kg
Cooktop (mm)	340 x 460
Packed Dimensions (mm)	450 x 825 x 1200
Packed Weight (mm)	65kg

	Natural	Universal LPG
Gas Connection	1/2" BSP	1/2" BSP
Minimum Normal Test Gas Pressure	1.3 kPa	2.75 kPa
Maximum Normal Test Gas Pressure	3.5 kPa	3.5 kPa
Nominal Test Point Pressure	1.0 kPa	2.65 kPa
Total Nominal Gas Consumption	25 MJ/h	25 MJ/h

Note: It is the responsibility of the installing gas plumber to ensure correct supply and connection sustaining appropriate pressure, when all installed gas appliances are operating at maximum.

Legend:

A	Gas Connection

Due to continuous product research and development, the information contained herein is subject to change without notice.

Revision: 01 - 05/01/2022 - A

www.stoddart.com.au
www.stoddart.co.nz

AUSTRALIA AND NEW ZEALAND GAS SAFETY CERTIFICATION

STODDART®