LSRF LINEAR SERIES - CHILLED WELL - Ganrty Only with No Glass

CHEFS DEPOT Culinary Supplies

cossiga

CABINET DIMENSIONS & SPECIFICATIONS

MODEL	CABINET				BENCH TOP CUT OUT HOLE SIZE	PANS	TEMP RANGE	REFRIGERANT	FREQUENCY	POWER		CONNECTION ELECTRICAL POWER CORD 3000MM		VOLTAGE	PACKED FOR SHIPPING			
	LENGTH [MM]	DEPTH [MM]	HEIGHT [MM]	WEIGHT [KG]		65MM	DEG C			KW 230V	AMPS	NZ 10 AMP	UK 13 AMP		LENGTH [MM]	DEPTH [MM]	HEIGHT [MM]	WEIGHT [KG]
LSRF3	1145	690	555	128	1125x670	3 x 1/1 65mm Gastro Pans	2-5	R290	50 HZ	0.92	4.5	3 PIN PLUG	3 PIN PLUG	220-240V	1250	770	1060	128
LSRF4	1485	690	555	152	1465x670	4 x 1/1 65mm Gastro Pans	2-5	R290	50 HZ	0.92	4.5	3 PIN PLUG	3 PIN PLUG	220-240V	1590	770	1060	152
LSRF5	1825	690	555	179	1805x670	5 x 1/1 65mm Gastro Pans	2-5	R290	50 HZ	0.92	4.8	3 PIN PLUG	3 PIN PLUG	220-240V	1930	770	1060	179
LSRF6	2165	690	555	201	2145x670	6 x 1/1 65mm Gastro Pans	2-5	R290	50 HZ	1.15	5.5	3 PIN PLUG	3 PIN PLUG	220-240V	2270	770	1060	201

PRODUCT FEATURES

- Deck forced refrigeration
- Canopy LED light
- Integral condenser
- Self evaporating
- 65mm deep full size pan supplied
- Foam insulated double skin base

LSRF SIDE ELEVATIONS

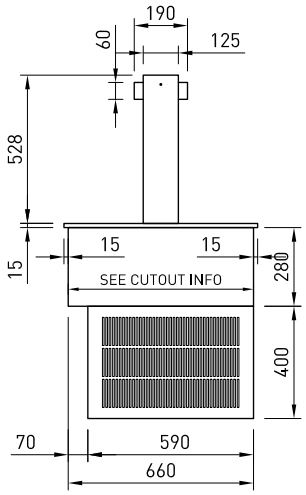

LEFT

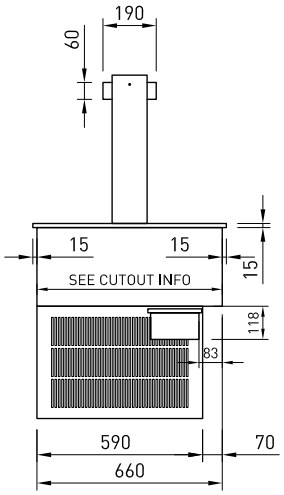

RIGHT

GASTRO PANS

Units supplied with 1/1 pans at 65mm deep, max pan depth is 100mm

ELECTRICAL POWER

Electrical power cord 2200mm
3 pin 10 amp 1 phase socket required.
Maximum ambient operation
temperature climate class N max 32° C.

ASSEMBLY REQUIRED

Prior to installation see, installation guidelines, ventilation requirements and drainage options documents

Download C.A.D models or contact us on COSSIGA.COM

LSRF6



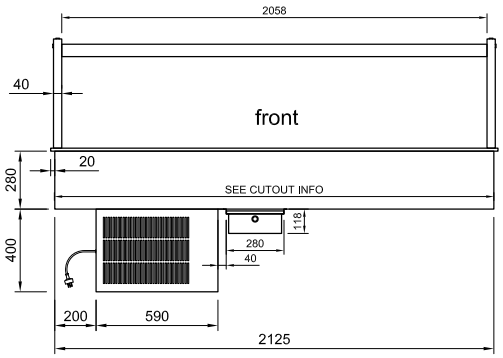

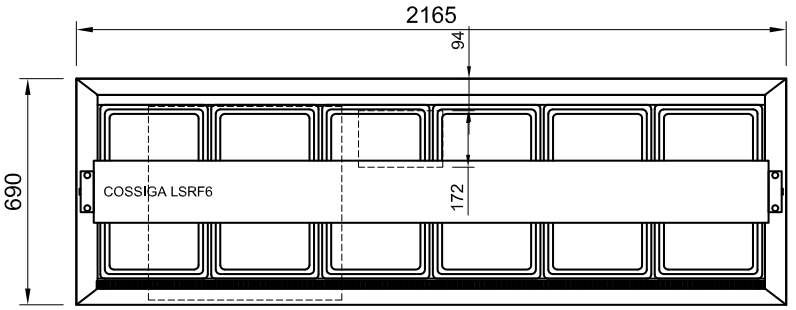

ASSEMBLY REQUIRED

Download C.A.D models or contact us on COSSIGA.COM