LSRF-FS LINEAR SERIES - CHILLED WELL - Full Square Glass Gantry

CABINET DIMENSIONS & SPECIFICATIONS

MODEL	CABINET				BENCH TOP CUT OUT HOLE SIZE	PANS	TEMP RANGE	REFRIGERANT	FREQUENCY	POWER		CONNECTION ELECTRICAL POWER CORD 3000MM		VOLTAGE	PACKED FOR SHIPPING			
	LENGTH [MM]	DEPTH [MM]	HEIGHT [MM]	WEIGHT [KG]		65MM	DEG C			KW 230V	AMPS	NZ 10 AMP	UK 13 AMP		LENGTH [MM]	DEPTH [MM]	HEIGHT [MM]	WEIGHT [KG]
LSRF3-FS	1145	690	555	179	1125x670	3 x 1/1 65mm Gastro Pans	2-5	R290	50 HZ	0.92	4.5	3 PIN PLUG	3 PIN PLUG	220-240V	1250	770	1060	179
LSRF4-FS	1485	690	555	211	1465x670	4 x 1/1 65mm Gastro Pans	2-5	R290	50 HZ	0.92	4.5	3 PIN PLUG	3 PIN PLUG	220-240V	1590	770	1060	211
LSRF5-FS	1825	690	555	250	1805x670	5 x 1/1 65mm Gastro Pans	2-5	R290	50 HZ	0.92	4.8	3 PIN PLUG	3 PIN PLUG	220-240V	1930	770	1060	250
LSRF6-FS	2165	690	555	291	2145x670	6 x 1/1 65mm Gastro Pans	2-5	R290	50 HZ	1.15	5.5	3 PIN PLUG	3 PIN PLUG	220-240V	2270	770	1060	291

PRODUCT FEATURES

- Deck forced refrigeration
- Canopy LED light
- Integral condenser
- Self evaporating
- 65mm deep full size pan supplied
- Foam insulated double skin base

LSRF-FS SIDE ELEVATIONS

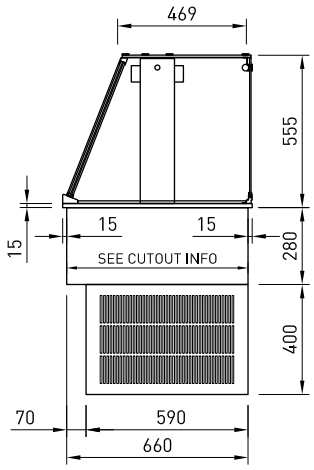

LEFT

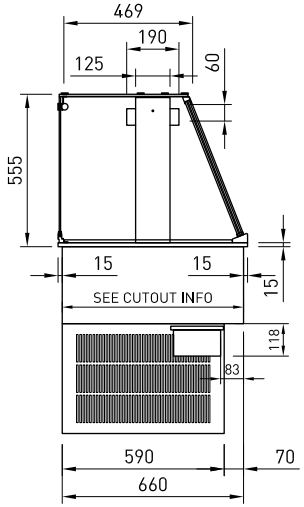

RIGHT

GASTRO PANS

Units supplied with 1/1 pans at 65mm deep, max pan depth is 100mm

ELECTRICAL POWER

Electrical power cord 2200mm
3 pin 10 amp 1 phase socket required.
Maximum ambient operation
temperature climate class N max 32° C.

ASSEMBLY REQUIRED

Prior to installation see, installation guidelines, ventilation requirements and drainage options documents

Download C.A.D models or contact us on COSSIGA.COM

LSRF6-FS



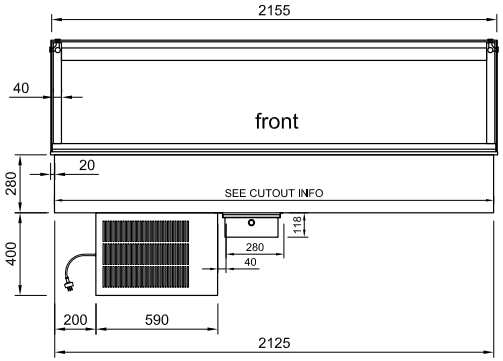

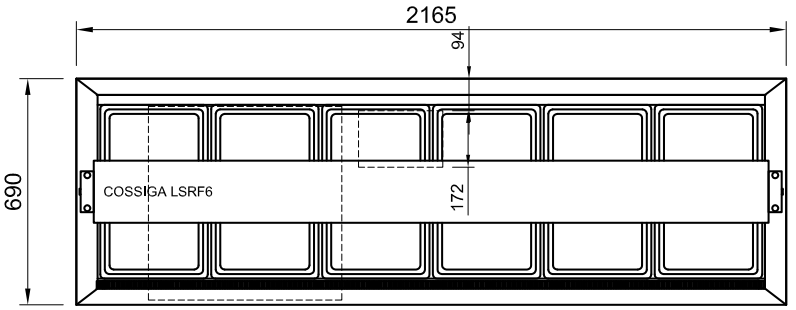

ASSEMBLY REQUIRED

Download C.A.D models or contact us on COSSIGA.COM