Fan cooling | Digital | LED lamp

* SUR15-3D-6
* SUF15-3D-6



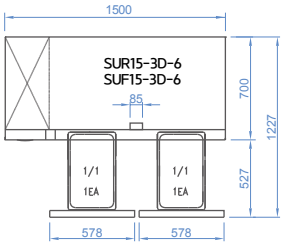

* SUR18-3D-3
SUF18-3D-3



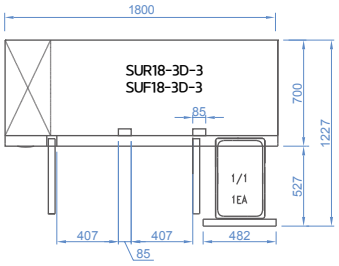

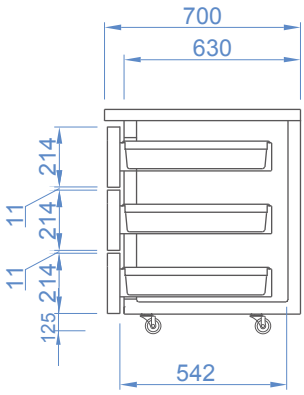

* SUR18-3D-6
* SUF18-3D-6



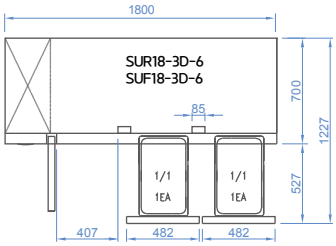

* SUR18-3D-9
* SUF18-3D-9



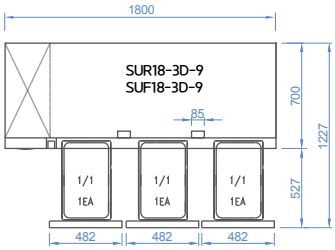

* A lead time may apply to the models shown on this page.

MODEL	SUR15-3D-6 SUF15-3D-6	SUR18-3D-3 SUF18-3D-3	SUR18-3D-6 SUF18-3D-6	SUR18-3D-9 SUF18-3D-9
Classifi cation	Refrigerator / Freezer			
Cabinet Dimension (WxDxH mm)	1500x 700 x 855	1800x 700 x 855	1800x 700 x 855	1800x 700 x 855
Capacity (ℓ)	395	505	505	505
Inner Temperature (°C)	-2~ 8 / -21 ~ -12			
Ambient Temperature (°C)	40 / 38			
Refrigerant	R-134a / R-404a			
Insulation Type	Polyurethane / Cyclopentane + CFC Free			
Amps (A)	2.5/4.4	3/4.6	3/4.6	3/4.6
Voltage (V/Hz/Ph)	240 / 50 / 1			
Weight (Kg)	116	126	135	144
Power (W)	314/366	366/643	366/643	366/643
Number of Doors	0	2	1	0
Compressor (HP)	1/4 3/4	1/3 3/4	1/3 3/4	1/3 3/4
Number of Shelves	0	2	1	0
Power Plug	10A			