UNDER COUNTER Drawer

CHEFS DEPOT
Culinary Supplies

*SUR9-3D-3
*SUF9-3D-3



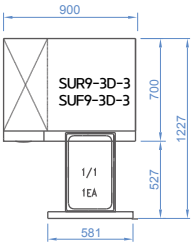

*SUR12-3D-3
*SUF12-3D-3



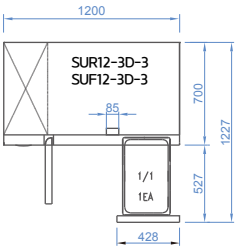

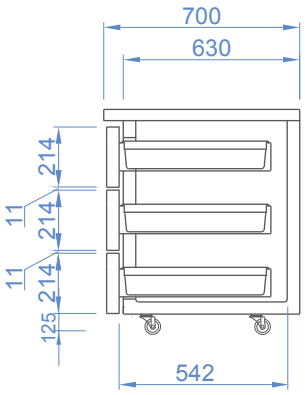

*SUR12-3D-6
*SUF12-3D-6



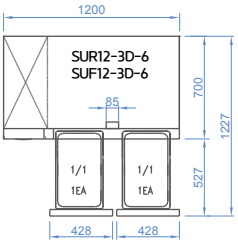

*SUR15-3D-3
*SUF15-3D-3



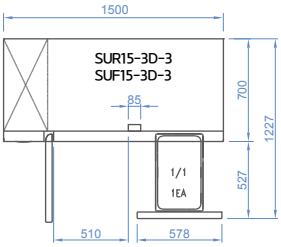

* A lead time may apply to the models shown on this page.

MODEL	SUR9-3D-3 SUF9-3D-3	SUR12-3D-3 SUF12-3D-3	SUR12-3D-6 SUF12-3D-6	SUR15-3D-3 SUF15-3D-3
Classifi cation	Refrigerator / Freezer			
Cabinet Dimension (WxDxH mm)	900x 700 x 855	1200x 700 x 855	1200x 700 x 855	1500x 700 x 850
Capacity (ℓ)	179	280	280	395
Inner Temperature (°C)	-2~ 8 / -21 ~ -12			
Ambient Temperature (°C)	40 / 38			
Refrigerant	R-134a / R-134a	R-134a / R-404a	R-134a / R-404a	R-134a / R-404a
Insulation Type	Polyurethane / Cyclopentane + CFC Free			
Amps (A)	2.3/3	2.5 /3.3	2.5/ 3.3	2.5 / 4.4
Voltage (V/Hz/Ph)	240 / 50 / 1			
Weight (Kg)	84	97	106	107
Power (W)	314/ 366	314/ 366	314/ 366	314/ 366
Number of Doors	0	1	0	1
Compressor (HP)	1/4 1/3	1/4 1/3	1/4 1/3	1/4 3/4
Number of Shelves	0	1	0	1
Power Plug	10A			