SENSOR TAP DECK MOUNTED AC



Order Code 42208

Zip AquaSense™ Touch-free tap range incorporates simple and modern design, with the latest electronic functionality delivering maximum hygiene and efficiency with integrated flow control achieving a 6 Star WELS rating for maximum water savings, the tap also features an automatic purge function, sensor range adjustment, wave on/wave off function, Anti-Vandal and Lock Out functions and a Chlorination function.

- Six-star WELS water rating, cuts water consumption.
- Designed to deliver water at 3.5 litres per minute.
- Nozzle gives an aggressive spray (versus a cascade) for high cleansing capability at a low flow rate.
- Sensor is positioned to prevent accidental activation.
- Design minimises run-on due to reflective surfaces.
- Solenoid latching valve supplied, with connections.
- Power pack (240/6 volt) connects to 10 amp GPO.
- Lithium battery pack option for simpler installation.
- Heavy duty construction to avoid vandal damage.

Manufacturing Code	42208

Water Pressure	Min 70kPa - Max 700kPa
Water Connection	12.7mm BSP
Power Rating	6V transformer power pack 10amp GPO,220V - 240V AC
Product Approvals	Watermark, CE
Wels Rating	6 Star
Warranty	1 Year

Installation Requirements

Must be installed by a suitably qualified person in accordance with manufacturers instructions and with all relevant plumbing and electrical regulations

Installation Detail

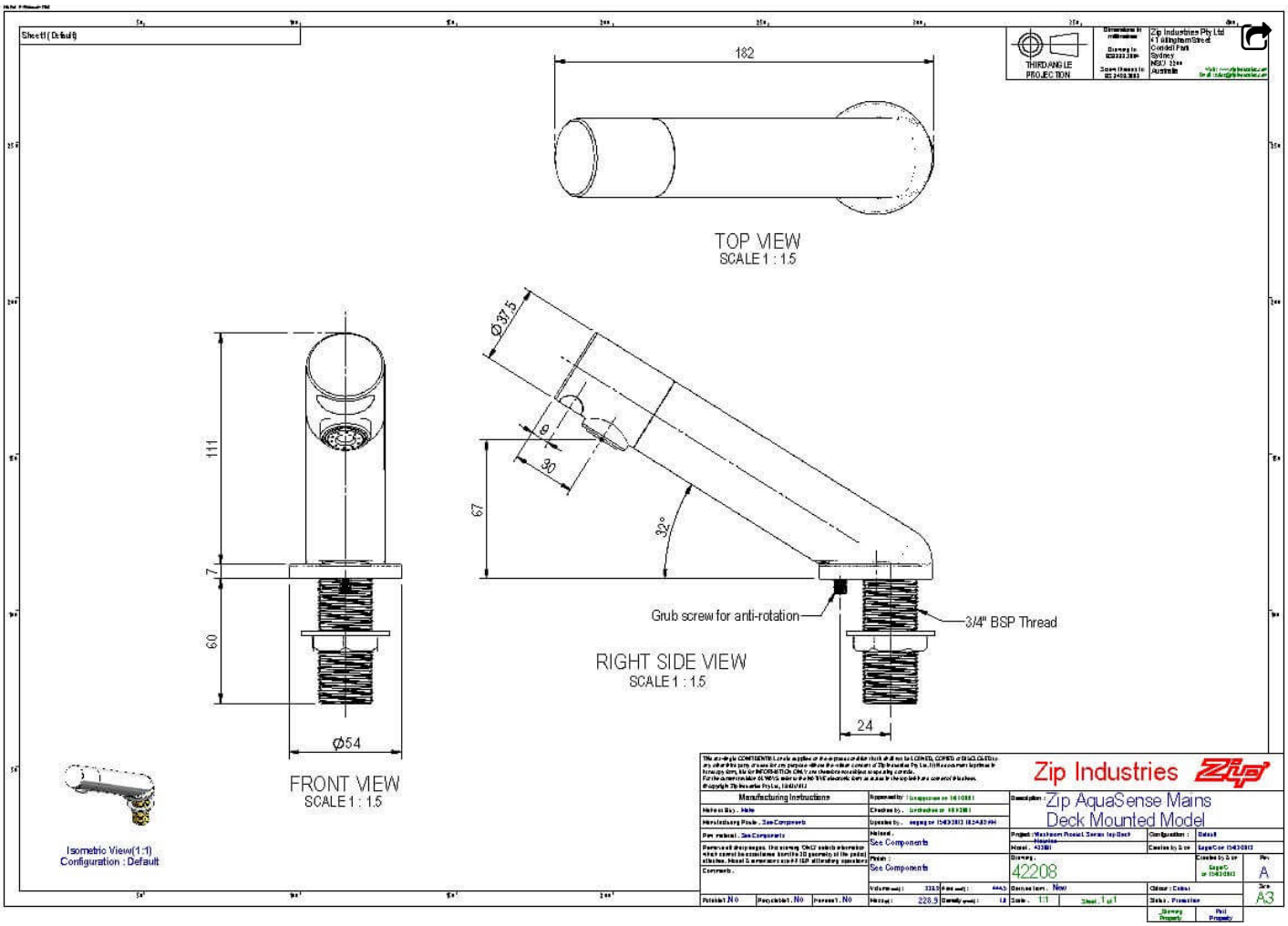
182
TOP VIEW
SCALE 1 : 1.5
Ø37.5
θ
30
67
32°
Grub screw for anti-rotation
3/4" BSP Thread
RIGHT SIDE VIEW
SCALE 1 : 1.5
24
111
7
60
Ø54
FRONT VIEW
SCALE 1 : 1.5
Isometric View(1:1)
Configuration : Default
Zip Industries
Zip AquaSense Mains Deck Mounted Model
42208
A3