SPARKLING REPLACEMENT CARTRIDGE

Order Code 93179

Easily replace the sparkling canisters in your Zip HydroTap G4 or G5 commercial models. The Sparkling Replacement Canister contains 2.6kg (4.0L) of food grade carbon dioxide. Canisters are pressurised and must be handled with care. Refer to installation instructions provided with the replacement cartridge kit.



Manufacturing Code	93179
Capacity	Commercial
Consumable Type	Sparkling

Installation Requirements

Installation Detail

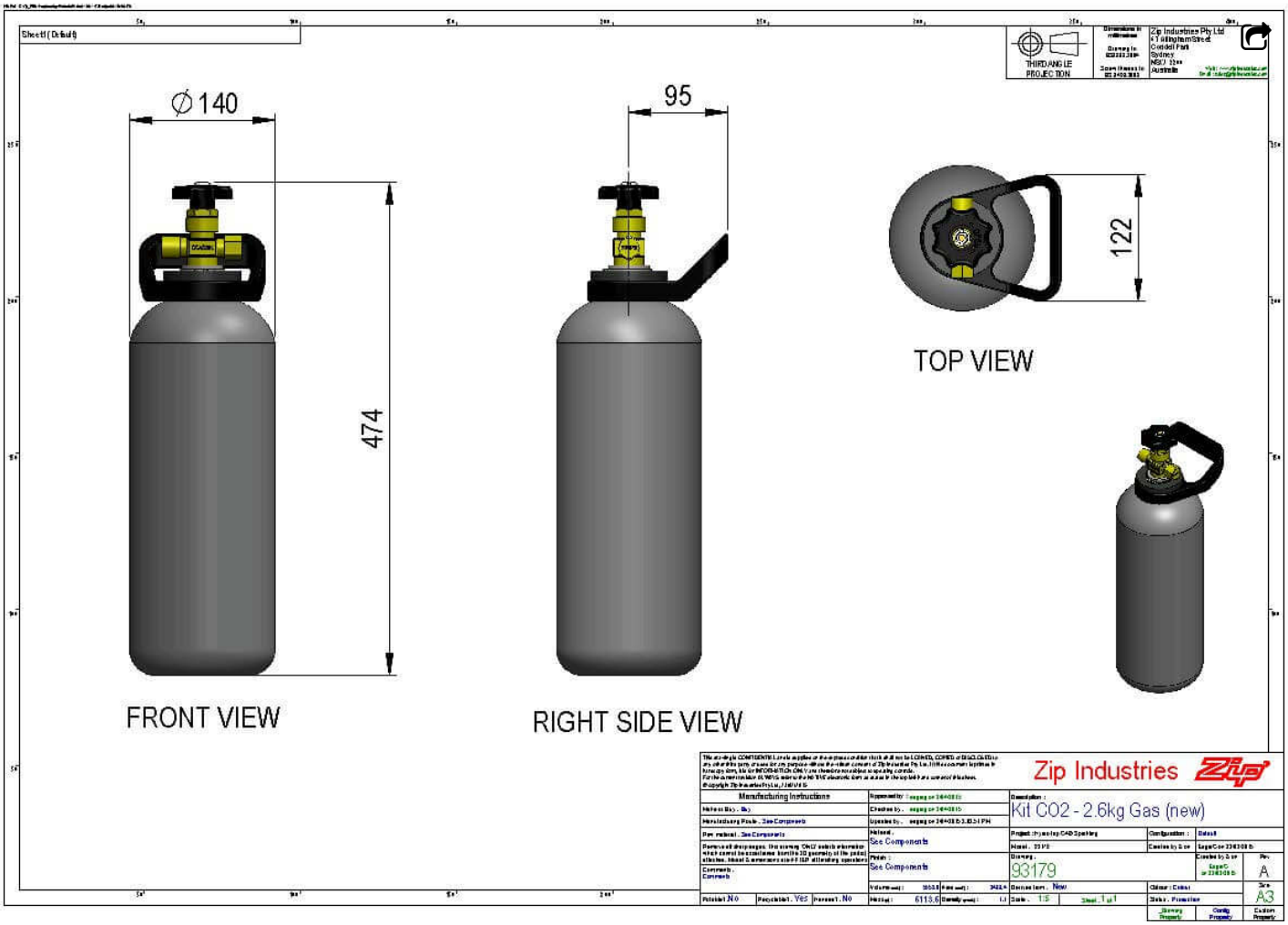
Sheet1 (Default)
THIRD ANGLE PROJECTION
Zip Industries Pty Ltd
4-7 Millingham Street
Cordell Park
Sydney
NSW 2244
Australia
∅140
474
FRONT VIEW
95
RIGHT SIDE VIEW
122
TOP VIEW
Zip Industries
Manufacturing Instructions
Kit CO2 - 2.6kg Gas (new)
See Components
See Components
93179
A
A3
Yes
No
6113.6
1:5
1 of 1