WARRANTY 3 YEARS PARTS & LABOUR

NATIONWIDE 24/7 SERVICE 365 DAYS

CHEFS DEPOT Culinary Supplies

Turbo air

NSW & VIC Rebate Eligible

TOP MOUNT SOLID DOOR

Fridge

MODEL : KR65-3(HC) / KR65-3-N

NATURAL Refrigerant

Self-Cleaning Condenser

NO MAINTENANCE REQUIRED

FEATURES / BENEFITS

■ *Digital temperature control & monitor system*

Keep food products safe by maintaining constant temperatures. External digital display allows for easy monitoring.

■ *Hydrocarbon(HC) refrigerants (R-290)*

With innovative and eco-friendly technology, Turbo Air brings you hydrocarbon refrigerators designed to meet DOE's Energy Conservation Standards in 2017 and to use EPA's SNAP Program approved HC refrigerants. Hydrocarbon refrigerants do not deplete the ozone layer and have very low affect to global warming (ODP-0, GWP-3).

■ *Hot Gas Condensate System*

Through Turbo Air's creative innovation, the condensate system surfaces have been specially treated to resist corrosion. This not only increases efficiency without the risk of refrigerant leaking from corrosion, but also prevents the overflow of condensate water.

■ *Self Cleaning Condenser Only at Turbo Air*

The accumulation of dust in the condenser causes the failure or breakdown of refrigerators. Refrigerators run normally until they reach a certain level of accumulation. When the dust accumulation is too much, their performance drops quickly resulting in possible spoiling of the contents. The self cleaning condenser keeps the condenser clean and prevents performance system failure by automatically brushing periodically.

■ *Exterior & interior of the cabinet*

The Turbo Air K-series boasts a stainless steel exterior (galvanized steel back and bottom). Interior is stainless steel floor with AL sides, back and AL door liners. It guarantees the utmost in cleanliness and long product life. The K- series adds a touch of style to the most refined setting.

■ *High-density polyurethane insulation*

The entire cabinet structure and solid doors are foamed-in-place using high density, CFC free polyurethane insulation.

■ *Ergonomically designed doors*

Customers' fatigue fades away with easy grip handles and doors that open effortlessly. These features along with self-closing doors make this the ultimate choice in customer convenience.

■ Meat Function

The Meat function allows the compressor to run continuously for up to 2 hours. When activated, the temperature drops quickly. This is ideal when you put new stock and need to chill/freeze it quickly. Also for aging meat and fish to an ideal temperature.

Adjustable, heavy duty, PE (polyethylene) coated wire shelves

Fridge holds 1°C ~ 8°C for the best in food preservation

■ *Standard features*

- Anti-corrosion coated evaporator
- Self-contained system
- Standard 125mm. swivel castors with locks on the front set
- Door locks standard



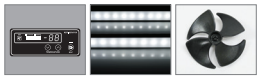

LED interior lighting & fan control (only at Turbo Air)

Energy efficient LED lighting lights every corner, making items easy to find. Fan control function automatically shuts off the fan when the door is open, which prevents hot air from being drawn in, thus maintaining the cool inner temperature.

Optional features

- 125mm castors fitted
- 180mm,105mm, 80mm castors optional
- Adjustable legs 100-155mm, 70-90mm

REFRIGERATOR MANUFACTURER Turbo air

Best Value Commercial Refrigerator

TOP MOUNT SOLID DOOR

Fridge
MODEL : KR65-3(HC) / KR65-3-N

Model	KR65-3-N(HC)
Refrigerant	R-290
COMP (HP)	1/3HP / 2/5HP
POWER INPUT(W)	450
Energy consumption	3.84
AMPS(A)	3.0
Capacity	1876
Product Dimension W	1900
Product Dimension D	850
Product Dimension H	1926
Weight	167
Stainless steel	SUS 439 & SUS 430
Features	SCC (Self Cleaning Condensor)
Max GN Pan depth	
GN Pan	
Door lock	yes
Adjustable Shelves	9
LED light	yes
Temperature range	1℃~8℃
Ambient temperature	35℃
Drainage / Forced Evaporation	Heater + Soaking Paper
Temperature control	Digital control
Cooling type	FAN COOLING
Glass Type (Low-e / Heater / How many layer of the glass)	

Design and specifications subject to change w ithout notice.
Actual Shipping w eight may differ due to extra packing materials for product protection.

PLAN VIEW

(unit : mm)

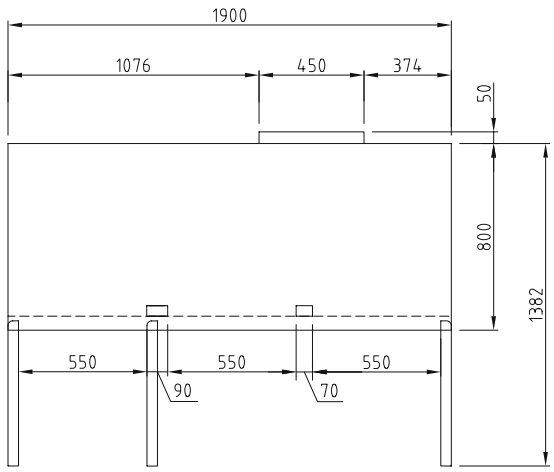

TOP VIEW

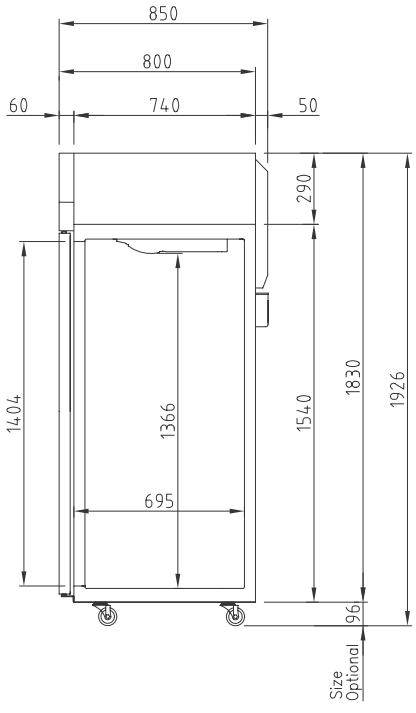

SIDE VIEW

- Door Locks Standard
- Interior LED Lighting Standard
- Self-Contained System
- Standard 3" Swivel Casters with Locks on the Front Set
- Solid and Sturdy Grille Design

WARRANTY 3 YEARS PARTS & LABOUR

NATIONWIDE 24/7 SERVICE 365 DAYS

Turbo air

email : TA.admin@turboairinc.com.au

AUSTRALIA BRANCH

TURBO AIR PTY LTD
www.turboairinc.com.au
1st Floor, Building E
10 Highgate St, Auburn
NSW 2144 Australia
T. 02 9737 9881