WARRANTY 3 YEARS PARTS & LABOUR

NATIONWIDE 24/7 SERVICE 365 DAYS

CHEFS DEPOT Culinary Supplies

Turbo air

Great NSW & VIC Rebate Eligible

TOP MOUNT GLASS DOOR

REFRIGERATOR

MODEL : KR45-2G(HC) / KR45-2G-N

NATURAL Refrigerant

Self-Cleaning Condenser

NO MAINTENANCE REQUIRED

FEATURES / BENEFITS

■ *Digital temperature control & monitor system*

Keep food products safe by maintaining constant temperatures. External digital display allows for easy monitoring.

■ *Hydrocarbon(HC) refrigerants (R-290)*

With innovative and eco-friendly technology, Turbo Air brings you hydrocarbon refrigerators designed to meet DOE's Energy Conservation Standards in 2017 and to use EPA's SNAP Program approved HC refrigerants. Hydrocarbon refrigerants do not deplete the ozone layer and have very low affect to global warming (ODP-0, GWP-3).

■ *Hot Gas Condensate System*

Through Turbo Air's creative innovation, the condensate system surfaces have been specially treated to resist corrosion. This not only increases efficiency without the risk of refrigerant leaking from corrosion, but also prevents the overflow of condensate water.

■ *Self Cleaning Condenser Only at Turbo Air*

The accumulation of dust in the condenser causes the failure or breakdown of refrigerators. Refrigerators run normally until they reach a certain level of accumulation. When the dust accumulation is too much, their performance drops quickly resulting in possible spoiling of the contents. The self cleaning condenser keeps the condenser clean and prevents performance system failure by automatically brushing periodically.

■ *Exterior & interior of the cabinet*

The Turbo Air K-series boasts a stainless steel exterior (galvanized steel back and bottom). Interior is stainless steel floor with AL sides, back and AL door liners. It guarantees the utmost in cleanliness and long product life. The K- series adds a touch of style to the most refined setting.

■ *High-density polyurethane insulation*

The entire cabinet structure and solid doors are foamed-in-place using high density, CFC free polyurethane insulation.

■ *Ergonomically designed doors*

Customers' fatigue fades away with easy grip handles and doors that open effortlessly. These features along with self-closing doors make this the ultimate choice in customer convenience.

■ Meat Function

The Meat function allows the compressor to run continuously for up to 2 hours. When activated, the temperature drops quickly. This is ideal when you put new stock and need to chill/freeze it quickly. Also for aging meat and fish to an ideal temperature.

Adjustable, heavy duty, PE (polyethylene) coated wire shelves

Fridge holds 1°C ~ 8°C for the best in food preservation





LED interior lighting & fan control (only at Turbo Air)

Energy efficient LED lighting lights every corner, making items easy to find. Fan control function automatically shuts off the fan when the door is open, which prevents hot air from being drawn in, thus maintaining the cool inner temperature.

■ *Standard features*

- Anti-corrosion coated evaporator
- Self-contained system
- Standard 125mm. swivel castors with locks on the front set
- Door locks standard

■ *Optional features*

- 125mm castors fitted
- 180mm,105mm, 80mm castors optional
- Adjustable legs 100-155mm, 70-90mm

Turbo air REFRIGERATOR MANUFACTURER ■ **WARRANTY: 3 Year Parts and Labour Warranty**

Model	Swing Door	Capacity (litres)	#of Shelves	HP	AMPS	Crated Weight (kg)	W x D x H (mm)
KR45-2G-N	**2**	**1215**	**6**	**1/3**	**2.5**	**152**	**1260x850x1926**

TOP MOUNT GLASS DOOR

REFRIGERATOR

MODEL : KR45-2G(HC) / KR45-2G-N

SPEC SHEET	
Classification	Refrigerator
Cabinet dimension (WxDxH mm)	1260x850x1926
Capacity (Liters)	1215
Inner Temperature	1°c ~ 8°c
Ambient Temperature	**35°C**
Doors	2
# of shelves	6
Refrigerant	**R290**
Compressor (HP)	1/3
Cooling Type	Fan cooling type
Insulation Type	Polyurethane/ Cyclopentane+CFC Free
Temperature Control Type	Digital
Amps (A)	**2.5**
Voltage (V/Hz/Ph)	240V 50Hz 1Ph
Power (W)	**350**
Weight (Kg)	152

Design and specifications subject to change without notice.
Actual shipping weight may differ due to extra packing materials for product protection.

PLAN VIEW

(unit : mm)

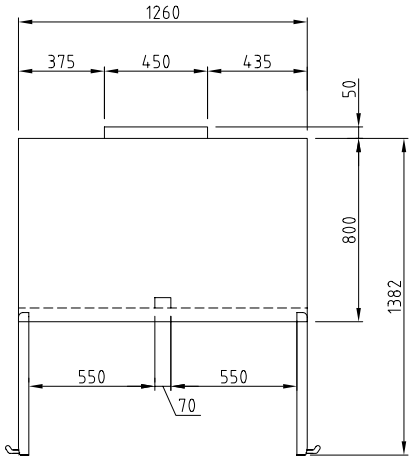

TOP VIEW

- DOOR LOCKS STANDARD
- INTERIOR LED LIGHTING STANDARD
- SELF-CONTAINED SYSTEM
- STANDARD 3" SWIVEL CASTERS WITH LOCKS ON THE FRONT SET
- SOLID AND STURDY GRILLE DESIGN
- ALUMINIUM DOOR FRAME
- LOW-E DOUBLE GLASS

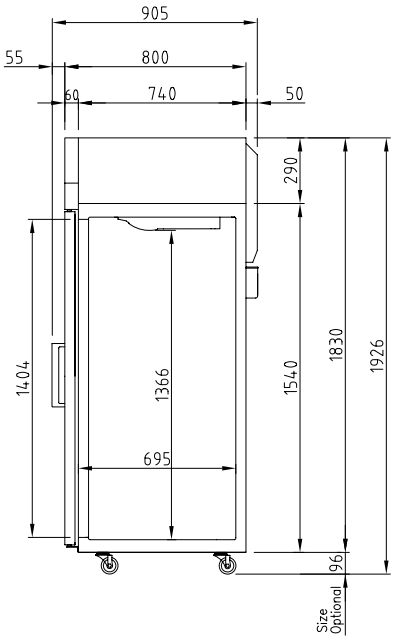

SIDE VIEW

WARRANTY 3 YEARS PARTS & LABOUR

NATIONWIDE 24/7 SERVICE 365 DAYS

Turbo air

email : TA.admin@turboairinc.com.au

AUSTRALIA BRANCH

TURBO AIR PTY LTD
www.turboairinc.com.au
1st Floor, Building E
10 Highgate St, Auburn
NSW 2144 Australia
T. 02 9737 9881