WARRANTY 3 YEARS PARTS & LABOUR

NATIONWIDE 24/7 SERVICE 365 DAYS

CHEFS DEPOT Culinary Supplies

Turbo air

NSW & VIC Rebate Eligible

UNDER COUNTER SOLID DOOR

Fridge
MODEL : KUR15-2-N / KUR15-2(HC)
KUR15-2S-N / KUR15-2(600)(HC)

FEATURES / BENEFITS

NATURAL Refrigerant **Front Breathing**

Digital temperature control & monitor system
Keep food products safe by maintaining constant temperatures. External digital display allows for easy monitoring.

Hydrocarbon(HC) refrigerants (R-290)
With innovative and eco-friendly technology, Turbo Air brings you hydrocarbon refrigerators designed to meet DOE's Energy Conservation Standards in 2017 and to use EPA's SNAP Program approved HC refrigerants. Hydrocarbon refrigerants do not deplete the ozone layer and have very low affect to global warming (ODP-0, GWP-3).

Side mount compressor unit
With compressors positioned on the side of the unit, our refrigerators can now be serviced without being moved. Our innovative, front breathing feature also allows this model to be highly efficient in narrow spaces.

Exterior & interior of the cabinet
The Turbo Air K-series boasts a stainless steel exterior (galvanized steel back and bottom). Interior is stainless steel floor with AL sides, back and AL door liners. It guarantees the utmost in cleanliness and long product life. The K- series adds a touch of style to the most refined setting.

High-density polyurethane insulation
The entire cabinet structure and solid doors are foamed-in-place using high density, CFC free polyurethane insulation.

Hot gas condensate system
Through Turbo Air's creative innovation, the condensate system surfaces have been specially treated to resist corrosion. This not only increases efficiency without the risk of refrigerant leakage from corrosion, but also thoroughly prevents the overflow of condensate water.

Ergonomically designed doors
Customers' fatigue fades away with easy grip handles and doors that open effortlessly. These features along with self-closing doors make this the ultimate choice in customer convenience.

Adjustable, heavy duty, PE (polyethylene) coated wire shelves

Easy open front grille with condenser cleaning brush kit
Front grille cover is easily removable without any tools, which makes condenser cleaning easy and convenient at any time. Handy condenser cleaning brush is included inside the front grille cover.

Refrigerator holds 1°C ~ 8°C for the best in food preservation

Meat Function
The Meat function allows the compressor to run continuously for up to 2 hours. When activated, the temperature drops quickly. This is ideal when you put new stock and need to chill/ freeze it quickly. Also for aging meat and fish to an ideal temperature.



Available in 700mm as standard and slim 600mm deep

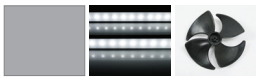

LED interior lighting & fan control (only at Turbo Air)
Energy efficient LED lighting lights every corner, making items easy to find. Fan control function automatically shuts off the fan when the door is open, which prevents hot air from being drawn in, thus maintaining the cool inner temperature.

Standard features
- Anti-corrosion coated evaporator
- Self-contained syste
- Standard 125mm. swivel castors with locks on the front se
- Door locks standar

Optional features
- 125mm castors fitte
- 180mm,105mm, 80mm castors optiona
- Adjustable legs 100-155mm, 70-90m

REFRIGERATOR MANUFACTURER Turbo air

■ **WARRANTY: 3 Year Parts and Labour Warranty**

UNDER COUNTER SOLID DOOR

Fridge
MODEL : KUR15-2-N / KUR15-2(HC)
KUR15-2S-N / KUR15-2(600)(HC)

Model	KUR15-2-N(HC)	KUR15-2S-N(600)(HC)
Refrigerant	R-290	R-290
COMP (HP)	1/4HP	1/4HP
POWER INPUT(W)	280	280
Energy consumption	1.67	1.65
AMPS(A)	1.4	1.4
Capacity	425	319
Product Dimension W	1500	1500
Product Dimension D	700	600
Product Dimension H	855	855
Weight	93	79
Stainless steel	SUS 439	SUS 439
Features	Front Breathing	Front Breathing
Max GN Pan depth		
GN Pan		
Door lock	yes	yes
Adjustable Shelves	2	2
LED light	yes	yes
Temperature range	1℃~8℃	1℃~8℃
Ambient temperature	35℃	35℃
Drainage / Forced Evaporation	Heater + Soaking Paper	Heater + Soaking Paper
Temperature control	Digital control	Digital control
Cooling type	FAN COOLING	FAN COOLING
Glass Type (Low-e / Heater / How many layer of the glass)		

Design and specifications subject to change w ithout notice.
Actual Shipping w eight may differ due to extra packing materials for product protection.

- Door Locks Standard
- Interior LED Lighting Standard
- Self-Contained System
- Standard 4" Swivel Casters with Locks on the Front Set
- Aluminium Door Frame
- Low-E Double Glass
- Depth 600mm Available Upon Request

WARRANTY 3 YEARS PARTS & LABOUR

NATIONWIDE 24/7 SERVICE 365 DAYS

PLAN VIEW

(unit : mm)

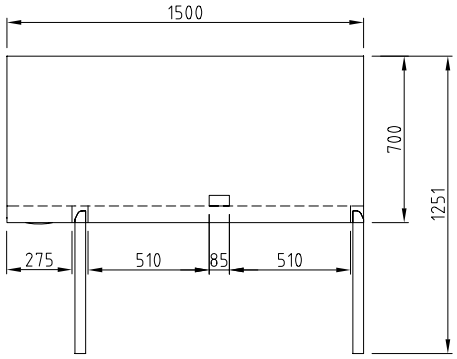

TOP VIEW

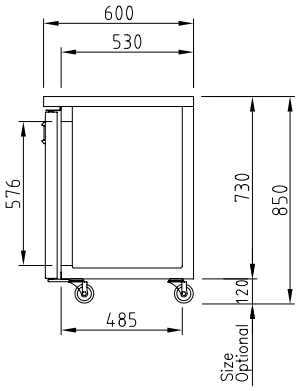

SIDE VIEW
(Depth 600mm)

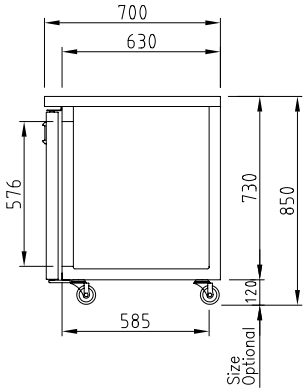

SIDE VIEW
(Depth 700mm)

Turbo air

email : TA.admin@turboairinc.com.au

AUSTRALIA BRANCH

TURBO AIR PTY LTD
www.turboairinc.com.au
1st Floor, Building E
10 Highgate St, Auburn
NSW 2144 Australia
T. 02 9737 9881