CHEFS DEPOT
Culinary Supplies

Stainless Steel Junior Biltong Cabinet

"Butcherquip's Biltong Cabinet is ideal for the Hunter or for the use in Butcheries"



Model: BCB0245

APPLICATION

- These units are ideal for butcheries, and perfect for the hunter

CONSTRUCTION

- Stainless steel construction
- Thermostatic temperature control
- Efficient extraction fan
- Heater cannot be operated without the fan in operation
- Lockable door
- 25kg wet product capacity
- 24 x stainless steel hanging rods
- 1 x stainless steel drip tray



BUTCHERQUIP

ALL BUTCHERQUIP EQUIPMENT COMES WITH A ONE YEAR WARRANTY ON COMPONENTS AND DEFECTIVE WORKMANSHIP.

BUTCHERQUIP

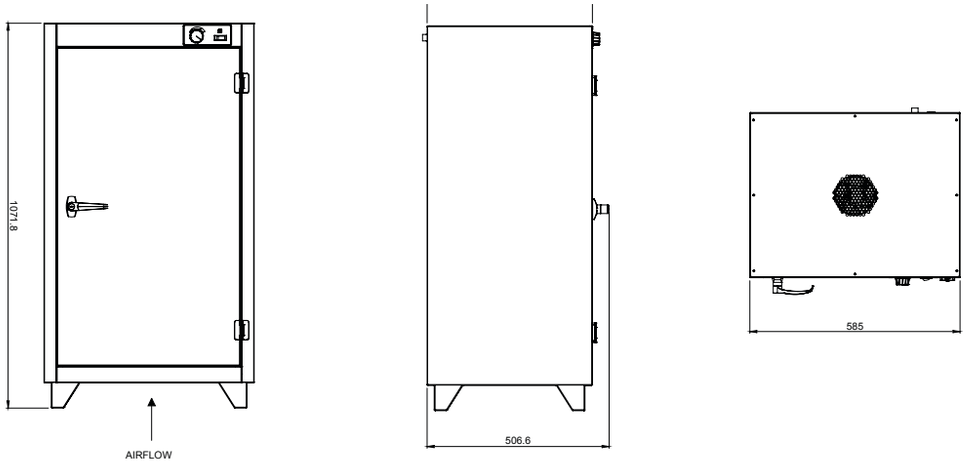

BUTCHERQUIP

Specification	*BCB0245*
Voltage:	230V / 50Hz
Power:	0.75kW
Shipping size:	600 X 580 X 1073
Unit size (WxDxH):	585 X 507 X 1071
Weight:	43kg

NOTE: When viewing the appliance from the front in it's usual operating position, the width (W) of the product is the total distance from left to right; the depth (D) of the product is the total distance from the front to the back; the height (H) is the total distance from the bottom of the product to the top.

BUTCHERQUIP

Note: Output performance figures quoted are dependant on various factors

Butcherquip reserves the right, without notice, to make changes and revisions to product specifications, materials and design, which in our opinion, will provide better performance, durability and efficiency.