Technical Drawings

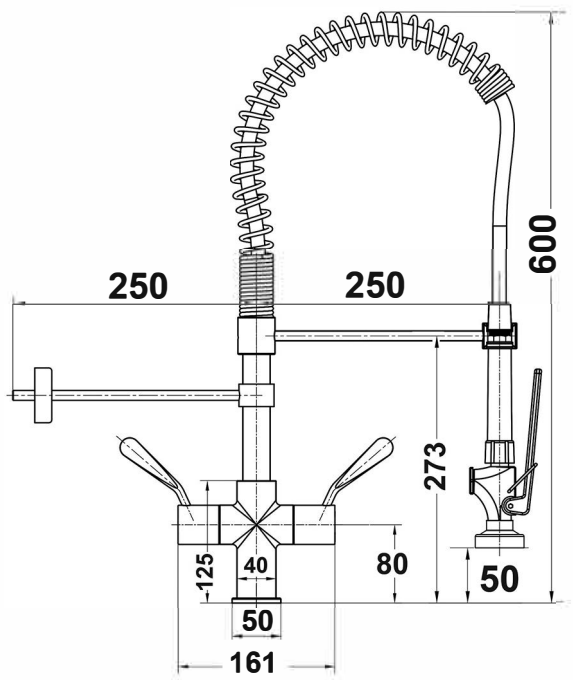

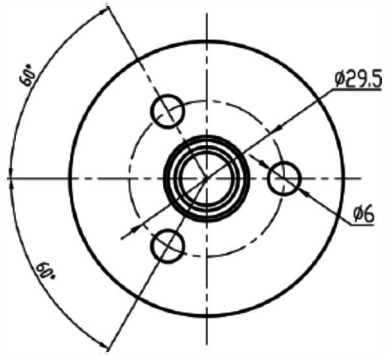

INSTALLATION DETAIL
(WALL BRACKET CUTOUT)

Cutout: 37mm

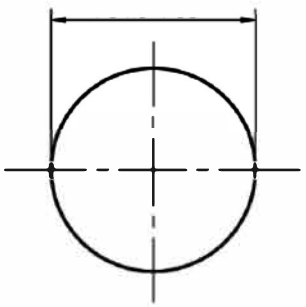

INSTALLATION DETAIL
(BENCH TOP CUTOUT)

PRODUCT WARRANTY/SERVICING

Our Products come with guarantees that cannot be excluded under the Australian Consumer Law.

The warranty is extended to the purchaser only and is not transferable.

Misuse is not covered by Warranty. All mixers should be installed with isolating stop valves.

Use only suitable agents to clean the surface of your mixer (ie. No abrasive cleaners)

The mixer must be installed by a licensed plumber, All new connections must be flushed prior to the connection.

If the incoming water pressure exceeds 500KPa, an approved limiting valve must be installed.

-Approved operating temperature is not to exceed 80 C
-Minimum Operating Pressure 150 KPa.
-Maximum Pressure: 350KPa.
-Optimum working pressure is 350KPa.
-Minimum Temperature: 10deg C
-Maximum Temperature: 80deg C
-Hose must not be bent during use.

IMPORTANT NOTE: We do not recommend dismantling the internal parts of the mixer. The mixers are individually factory assembled and tested to give the best performance.

NOTE: THE MIXER CAN ONLY BE USED ON MAIN PRESSURE SYSTEMS.

WaterMark™

CHEFS DEPOT
Culinary Supplies

Standard/Compliances
Tested to AS/NZS3718, AS4020 and AS/NZS6400

Installation Guide
FSM - JET1500DLH
DECK MOUNT PRE-RINSE

Congratulations for purchasing this quality Tap. This Commercial high-end Pre-rinse unit is already factory assembled and designed for easy installation and maintenance.

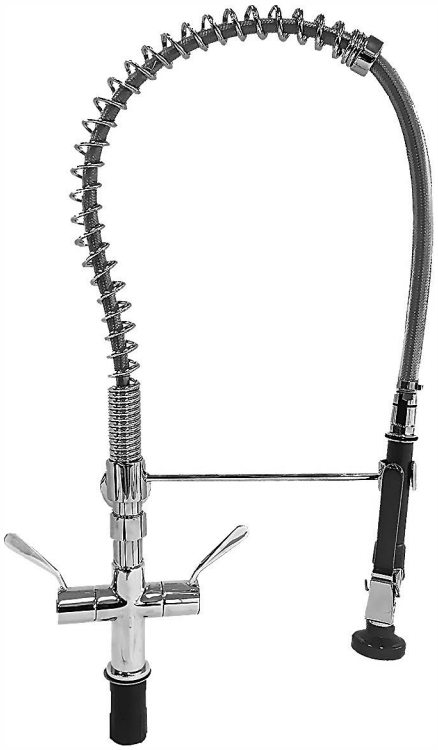

For all After Sales Service or assistance contact:

FSM
Excellence since 1976

(03) 9368 2300
www.fsm-pl.com.au

Please follow these instructions:

1. Place the base “O” Ring (10) on the underside of the body.

2. Screw in the hot and cold Flexible Connectors (47&46) body.

3. Place the Mixer Unit over the pre-punched tap hole in the sink or basin feeding the flexible connectors through first

4. From underneath, place the flange (43) and O ring (42) in the fixing tube (45) then place the (37) O ring and screw the fixing tube (45) to the mixer (9) until the mixer base (9) is firmly fixed to the sink or basin. Tighten with a Socket set or Tube Spanner.

5. Connect the Hot & Cold Flexible Connectors (47)(48) to the inlet isolation valves (by others) then Flush both the hot and cold lines with your hand over the top of the body to clear the line of any debris.

6. Then fit the main riser assembly into the body by pushing the Twin O ring Spigot downward, then fit and tighten the Allen Key screw (13) with the Allen key provided (14).

- Note: the wall support Bar (34) should be installed as high as possible. This wall support bar should be cut to fit the desired distance to the wall.

7. Ensuring the Riser is 90 degrees to the wall measure and cut the wall support bar to a length with a 2 to 5mm gap from the wall.

8. Fit the O ring (37) to the Groove on the fixing wall plate (30).

9. Slide on the Chrome Cover Flange (35), Nut (36), Brass Olive (38) & wall fixing Plate (39) onto the wall support Bar (34) as shown on the Part Break Up Drawing.

- For a masonry wall use the wall anchors (41) provided with Screws (41).

- For a Timber backed wall Use the Screws Provided (40).

- For SS Splash Back and or Cool Room Panel Wall ensure fixing method (by others) results in a solid fixing.

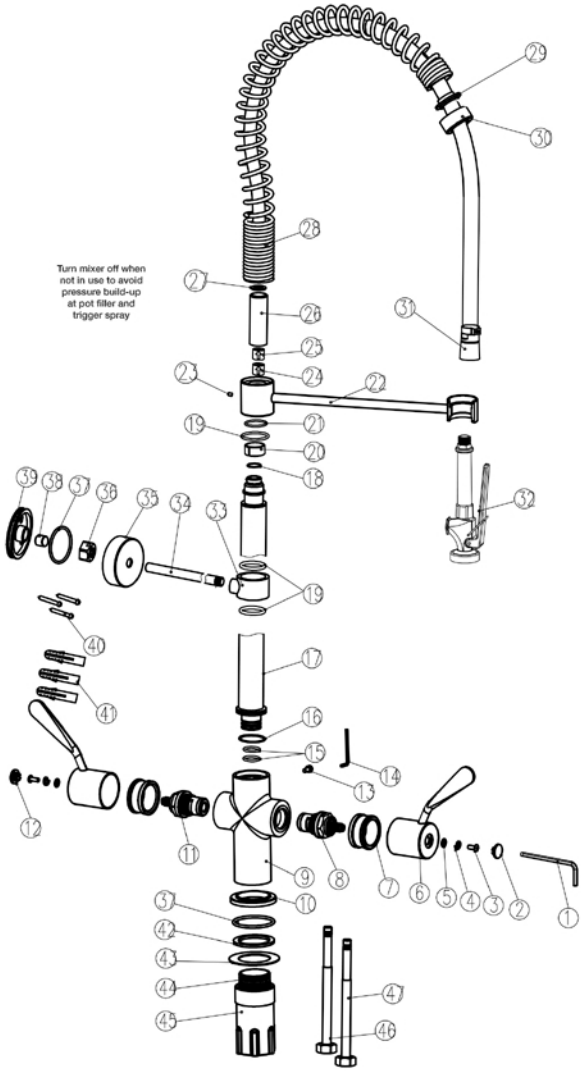

11.Swing the wall support bar (34) into position and mark the three holes for drilling into the wall (39) .

12.Swing the wall support bar to the left or right to enable the three holes to be drilled.

Note: The Mi thread on the end of the end of the Trigger Spray hose swivels, so you do not have to spin the whole hose around when connecting the Hose to the Riser Assembly.

13 .Swing the Wall Support Bracket back into position, line up the holes in (39) and screw the there given screws (40) (41) fixing plate back to the wall, tighten the brass nut and olive ensuring a firm and solid installation, slide the chrome cover plate over the wall plate.

14. Fit the Flat Washer (27) into the top of the Riser Assembly to ensure a water tight seal.

15. Slide the Spring return back to expose the MI Brass Connecting Thread.

16. Screw the Brass MI end of the Flexible Hose into the top of the Riser Assembly, do up firmly but do not over tighten - Support the weight of the hose and spring while tightening to prevent cross threading and kinking of the hose.

17. Slide the spring back over the end of the hose until it sits on top of the Riser Assembly.

18. Screw the Trigger Spray Unit (32) to the Flexible Hose, tighten firmly using a spanner on the flat section of the CP Loose Nut. Turn on the Water and test the unit.

