PIZZA PREP TABLE DRAWER

REFRIGERATOR

MODEL : CTPR-67SD-D2



FEATURES / BENEFITS

▪COLD AIR CURTAIN SYSTEM

Our innovative forced air system allows cold air to flow all around the food pan area, covering not only underneath the pan, but also to the front, top and the rear. This unique air flow creates a cold air-shield around the pan, which maintains the food temperature under 41°F (NSF requirement) even when the lids are opened.

▪ALL STAINLESS STEEL CABINET CONSTRUCTION

The SKIPIO PRO model boasts all stainless steel interior and exterior (galvanized steel top, bottom and back). It guarantees the utmost in cleanliness and long product life. The SKIPIO model can add a touch of style to the most refined setting.

▪STURDY, CLEAN STAINLESS STEEL SHELVING

▪FRONT BREADTHING, SIDE MOUNT COMPRESSOR UNIT

By positioning the compressor on the side of the unit, refrigerators can now be serviced without being moved. Our innovative, front breathing feature also allows this model to provide high efficiency in narrow spaces.

▪EFFICIENT REFRIGERATION SYSTEM

SKIPIO's solid door refrigerators are designed with oversized and balanced (CFC Free R-134A) refrigeration systems. These include efficient evaporators and condensers for faster cooling and greater efficiency.

▪INSULATED PAN COVER

▪EXTRA DEEP CUTTING BOARD INCLUDED (19-1/4"DEEP AND 1/2" THICK)

▪EXCELLENT COOLING SYSTEM

Powerful, forced-air refrigeration system maintains the storage cabinet at a constant temperature. The evaporator fan and a newly designed stainless steel louver allow uniform distribution of cold air to the food pans and throughout the unit to keep food temperature within the NSF standard 7 requirements.

▪REFRIGERATOR HOLDS 1℃~8℃ FOR THE BEST IN FOOD PRESERVATION

Model	# of Drawers	Doors	Capacity (Liters)	Shelves	Pans	Hood	Compressor (Hp)	Amps (A)	Power (W)	Weight (Kg)	L X D X H (mm)
CTPR-67-D2	2	1	566	2	6	1	7/8	6	660	255	1702x820x1069

PIZZA PREP TABLE DRAWER

REFRIGERATOR

MODEL : CTPR-67SD-D2

MODEL : CTPR-67SD-D2

SPEC SHEET	CTPR-67-D2
Classification	Refrigerator
Cabinet Dimension (WxDxH mm)	1702x820x1069
Capacity (Liters)	566
Inner Temperature	1°C~8°C
# of Drawers	2
Doors	1
Number of Shelves	2
Number of Pans	9
Number of Hood	2
Refrigent	R-134a
Compressor (Hp)	7/8
Cooling Type	Fan cooling type
Insulation Type	Polyurethane / Cyclopentane + CFC Free
Temperature Control Type	Thermostat
Amps (A)	6
Voltage (V/Hz/Ph)	240V 50Hz 1Ph
Power (W)	660
Weight (Kg)	255

WARRANTY 2 YEARS PARTS & LABOUR

NATIONWIDE 24/7 SERVICE 365 DAYS

PLAN VIEW

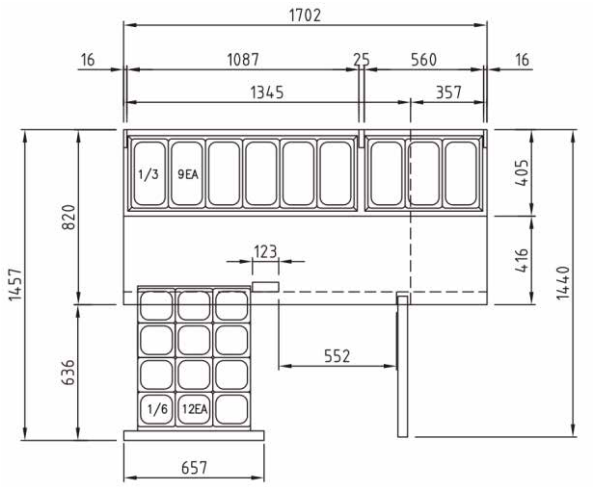

FRONT VIEW

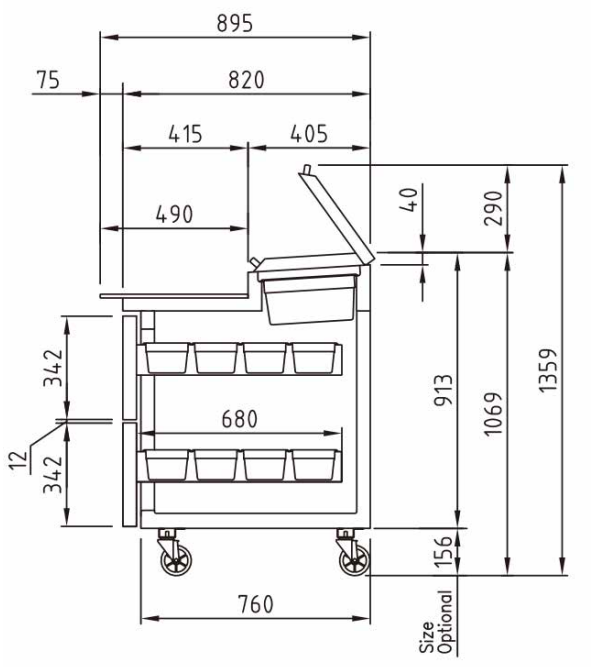

SIDE VIEW

AUSTRALIA BRANCH

TURBO AIR PTY LTD
www.turboairinc.com.au
1st Floor, Building E
10 Highgate St, Auburn
NSW 2144 Australia
T. 02 9737 9881