PIZZA TABLE-DOOR

Fridge
MODEL : CTPR-44SD

FEATURES / BENEFITS

Digital temperature control & monitor system

Keep food products safe by maintaining constant temperatures. External digital display allows for easy monitoring.

Side mount compressor unit

With compressors positioned on the side of the unit, our refrigerators can now be serviced without being moved. Our innovative, front breathing feature also allows this model to be highly efficient in narrow spaces.

Exterior & interior of the cabinet

The Turbo Air K-series boasts a stainless steel exterior (galvanized steel back and bottom). Interior is stainless steel floor with AL sides, back and AL door liners. It guarantees the utmost in cleanliness and long product life. The K- series adds a touch of style to the most refined setting.

High-density polyurethane insulation

The entire cabinet structure and solid doors are foamed-in-place using high density, CFC free polyurethane insulation.

Ergonomically designed doors

Customers' fatigue fades away with easy grip handles and doors that open effortlessly. These features along with self-closing doors make this the ultimate choice in customer convenience.

Adjustable, heavy duty, PE (polyethylene) coated wire shelves

Refrigerator holds 1°C ~ 8°C for the best in food preservation

COLD AIR CURTAIN SYSTEM

Our innovative forced air system allows cold air to flow all around the food pan area, covering not only underneath the

pan, but also to the front, top and the rear.

EXTRA DEEP CUTTING BOARD

Our cutting board is 490mm deep and 12mm thick to provide ample working space, and is made of easy to use and sanitize LDPE(low density polyethylene), The new side rail cutting board bracket makes it easy to secure and remove the cutting board.

CHEFS DEPOT
Culinary Supplies



- Pans included.



Fan control (only at Turbo Air)

Fan control function automatically shuts off the fan when the door is open, which prevents hot air from being drawn in, thus maintaining the cool inner temperature.

Standard features

- Anti-corrosion coated evaporator
- Self-contained syste
- Standard 125mm. swivel castors with locks on the front se
- Door locks standar

Optional features

- 125mm castors fitte
- 180mm,105mm, 80mm castors optiona
- Adjustable legs 100-155mm, 70-90m

REFRIGERATOR MANUFACTURER Turbo air ■ **WARRANTY: 3 Year Parts and Labour Warranty**

PIZZA TABLE-DOOR

Fridge
MODEL : CTPR-44SD

Model	CTPR-44SD
Refrigerant	R134a
POWER INPUT(W)	396
COMP (HP)	1/4HP
Energy consumption KW/24H	4
AMPS(A)	2.5
Capacity (ℓ)	396
Product Dimension W (mm)	1117
Product Dimension D (mm)	820
Product Dimension H (mm)	1069
Weight (Kg)	140
Stainless steel	SUS 439
Applied castors	125mm
Max GN Pan depth	150mm
GN Pan	6 x 1/3 GN Pan 150mm
Door lock	no
Adjustable Shelves	1
LED light	Yes
Temperature range	1°C~8°C
Ambient temperature	35°C
Drainage / Forced Evaporation Type	Sop paper
Temperature control type	Thermostat
Cooling type	FAN COOLING
Glass Type (Low-e / Heater / How many layer of the glass)	N/A
Features	COLD AIR CURTAIN SYSTEM EXTRA DEEP CUTTING BOARD
Design and specifications subject to change without notice. Actual Shipping weight may differ due to extra packing materials for product protection.	

PLAN VIEW

(unit : mm)

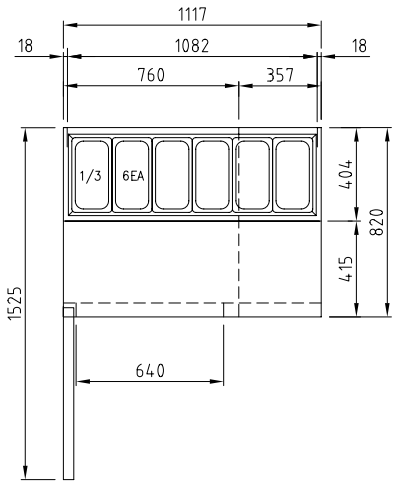

TOP VIEW

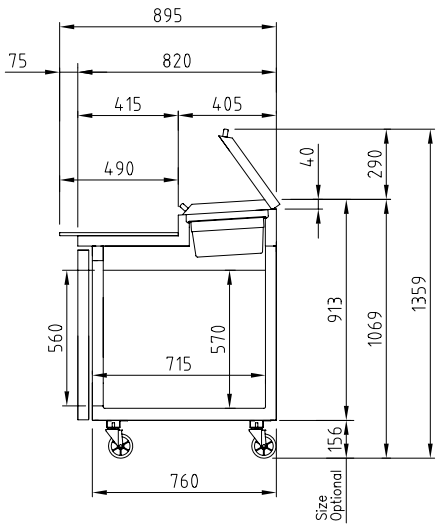

SIDE VIEW

WARRANTY 3 YEARS PARTS & LABOUR

NATIONWIDE 24/7 SERVICE 365 DAYS

Turbo air

email : TA.admin@turboairinc.com.au

7.12.23

AUSTRALIA BRANCH

TURBO AIR PTY LTD
www.turboairinc.com.au
1st Floor, Building E
10 Highgate St, Auburn
NSW 2144 Australia
T. 02 9737 9881