WARRANTY 3 YEARS PARTS & LABOUR

NATIONWIDE 24/7 SERVICE 365 DAYS

CHEFS DEPOT Culinary Supplies

Turbo air

UNDER COUNTER SALAD PREP

Fridge
MODEL : KSR24-4(FB)

FEATURES / BENEFITS

Digital temperature control & monitor system

Keep food products safe by maintaining constant temperatures. External digital display allows for easy monitoring.

Side mount compressor unit

With compressors positioned on the side of the unit, our refrigerators can now be serviced without being moved. Our innovative, front breathing feature also allows this model to be highly efficient in narrow spaces.

Exterior & interior of the cabinet

The Turbo Air K-series boasts a stainless steel exterior (galvanized steel back and bottom). Interior is stainless steel floor with AL sides, back and AL door liners. It guarantees the utmost in cleanliness and long product life. The K- series adds a touch of style to the most refined setting.

High-density polyurethane insulation

The entire cabinet structure and solid doors are foamed-in-place using high density, CFC free polyurethane insulation.

Hot gas condensate system

Through Turbo Air's creative innovation, the condensate system surfaces have been specially treated to resist corrosion. This not only increases efficiency without the risk of refrigerant leakage from corrosion, but also thoroughly prevents the overflow of condensate water.

Ergonomically designed doors

Customers' fatigue fades away with easy grip handles and doors that open effortlessly. These features along with self-closing doors make this the ultimate choice in customer convenience.

Adjustable, heavy duty, PE (polyethylene) coated wire shelves

Easy open front grille with condenser cleaning brush kit

Front grille cover is easily removable without any tools, which makes condenser cleaning easy and convenient at any time. Handy condenser cleaning brush is included inside the front grille cover.

Refrigerator holds 1°C ~ 8°C for the best in food preservation

Meat Function

The Meat function allows the compressor to run continuously for up to 2 hours. When activated, the temperature drops quickly. This is ideal when you put new stock and need to chill/ freeze it quickly. Also for aging meat and fish to an ideal temperature.

Front Breathing



- Pans not included.

- Pans included.



Fan control (only at Turbo Air)

Fan control function automatically shuts off the fan when the door is open, which prevents hot air from being drawn in, thus maintaining the cool inner temperature.

Standard features

- Anti-corrosion coated evaporator
- Self-contained system
- Standard 125mm. swivel castors with locks on the front set
- Door locks standard

Optional features

- 125mm castors fitted
- 180mm,105mm, 80mm castors optional
- Adjustable legs 100-155mm

REFRIGERATOR MANUFACTURER Turbo air ■ **WARRANTY: 3 Year Parts and Labour Warranty**

SALAD TABLE - BUFFET

Fridge
MODEL : KSR24-4(FB)

Model	KSR24-4(FB)
Refrigerant	R134a
POWER INPUT(W)	390
COMP (HP)	1/2HP
Energy consumption KW/24H	
AMPS(A)	3.4A
Capacity (ℓ)	690
Product Dimension W (mm)	2400
Product Dimension D (mm)	700
Product Dimension H (mm)	855
Weight (Kg)	165
Stainless steel	SUS 439
Applied castors	125mm
Max GN Pan depth	150mm
GN Pan	Not included
Door lock	yes
Adjustable Shelves	4
LED light	Yes
Temperature range	1°C~8°C
Ambient temperature	35°C
Drainage / Forced Evaporation Type	Sop paper
Temperature control type	Digital control
Cooling type	FAN COOLING
Glass Type (Low-e / Heater / How many layer of the glass)	N/A
Features	Easy filter cover
Design and specifications subject to change without notice. Actual Shipping weight may differ due to extra packing materials for product protection.	

PLAN VIEW

(unit : mm)

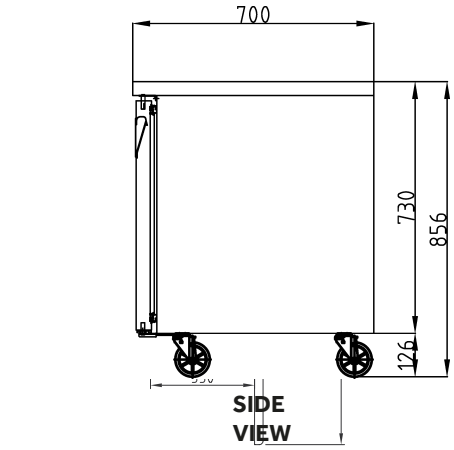

SIDE VIEW

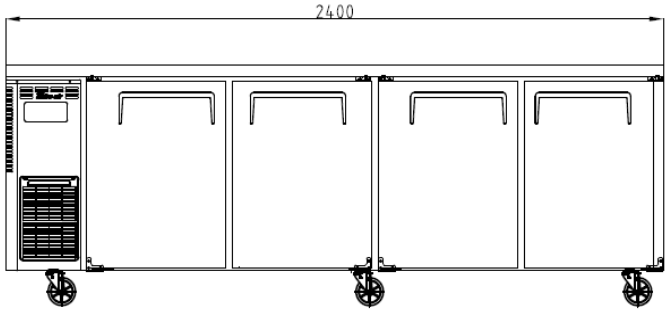

FRONT VIEW

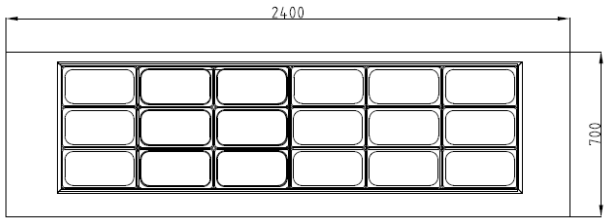

TOP VIEW

WARRANTY 3 YEARS PARTS & LABOUR

NATIONWIDE 24/7 SERVICE 365 DAYS

Turbo air

email : TA.admin@turboairinc.com.au

AUSTRALIA BRANCH

TURBO AIR PTY LTD
www.turboairinc.com.au
1st Floor, Building E
10 Highgate St, Auburn
NSW 2144 Australia
T. 02 9737 9881