FKUv 1660

Forced-air table-height refrigerator

Premium

CHEFS DEPOT
Culinary Supplies



LIEBHERR

FKUv 1660

Premium



Gross/net capacity	141/130 litre
Ext. dimensions in mm (w/d/h)	600/615/830
Int. dimensions in mm (w/d/h)	440/435/670
Energy consumption in 365 days 24 hours (kWh)	381 / 1.043
Climate rating	4
Ambient temperature range	+16°C to +43°C [1]
Refrigerant	R 600a
Connection Rating	1.0 A / 50 W
Frequency / Voltage	50 Hz / 220-240 V~
Cooling system	forced-air
Defrosting	automatic
Temperature range	+1°C to +15°C
Housing material/colour	stainless steel/stainless steel
Door material	Stainless steel
Liner Material	moulded polystyrol silver
Type of Control	electronic controller
Temperature display	external digital
Fault: warning signal	visual and audible
Adjustable Shelving	3
Loading capacity 0.5L PET	92
Loading capacity 0.33L can	163
Lock	fitted
Self-closing door	yes
Door hinges	right, reversible
Insulation	55 mm
Gross/net weight	40/37 kg
EAN-Nr.	9005382167199

[1] Indicates the ambient temperature at which the device can be operated safely.



LIEBHERR

Features



High impact product presentation

The energy-saving LED interior lighting provides the ideal presentation of the products stored

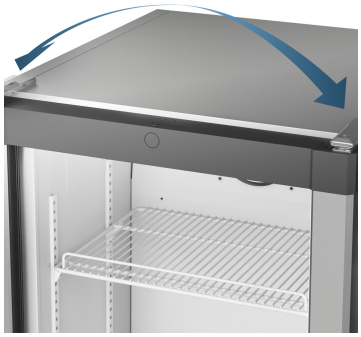

Reversible door hinges (left/right)

Liebherr appliances are factory-fitted with door hinges on the right. The ability to change the hinge side allows the appliance to be tailored to individual requirements and optimally positioned.



Under-worktop models

Several Liebherr models can be integrated underneath worktops, in which case a ventilation grille (200 cm² minimum) is required at the rear of the worktop to ensure sufficient aeration and ventilation of the appliance. In the absence of a ventilation grille in the worktop, the niche-height must be 860 mm, at the very least, to facilitate sufficient heat dissipation forwards. Under-worktop models offer a compact solution that is especially valuable in smaller work spaces.



Environmentally friendly refrigerants

Liebherr appliances are optimised for maximum energy efficiency and low operating costs. We only use the natural and environmentally-friendly refrigerants R 600a and R 290. When used with highly efficient compressors, these are extraordinarily efficient and, with their low global warming potential, also future-proof.

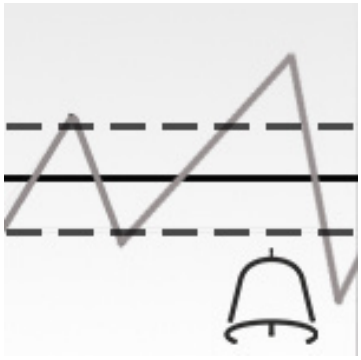

Temperature alarm

The integrated temperature alarm indicates if the lower or upper alarm thresholds have been breached. It uses both acoustic and visual signals to provide maximum security for goods that have been stored.



Efficient refrigeration system

Liebherr guarantees the outstanding quality of its refrigeration systems through expertise derived from decades of experience in the refrigeration technology sector, and through continuous research and development. By employing only premium-quality compressors, condensers, evaporators and other refrigeration components the energy consumption and operating costs of Liebherr appliances are significantly reduced.

The overview represents an excerpt of the most important appliance features. All other features of the appliance and further information are available at home.liebherr.com.

LIEBHERR

Technical drawing

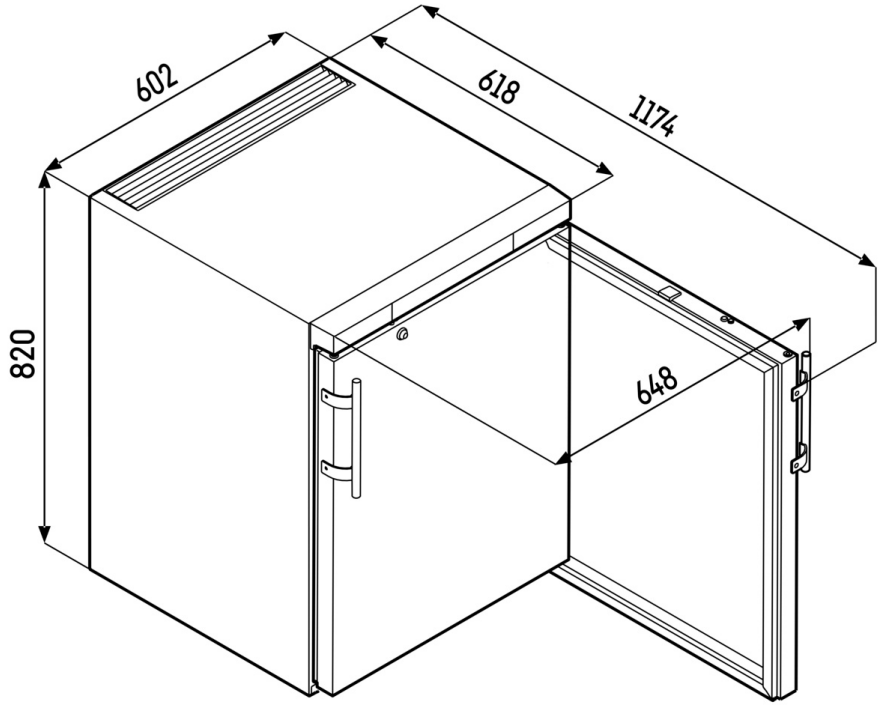

Products and their details are staged for advertising purposes. Whilst every effort is made to ensure all specifications and information in this flyer are accurate, Liebherr reserves the right to make changes without notification. Where actual appliance measurements, specifications, and ratings are crucial, we recommend that the actual appliance installation instructions that accompany each appliance be checked. Liebherr will not be liable for any damage. (29.11.2023)