Sinks & Basins

CHEFS DEPOT
Culinary Supplies

100% STAINLESS STEEL LEAD FREE

Conical Flushing Rim Sink - 450mm

5 YEAR WARRANTY

FRSC-DI450-304

FRSC-DI450-316

- Available in 1.2mm 304 grade or 316 grade stainless steel
- Integral flange around top of bowl
- 25mm BSP female inlet
- Concealed 25mm diameter flushing rim
- 100mm dropper waste



Top

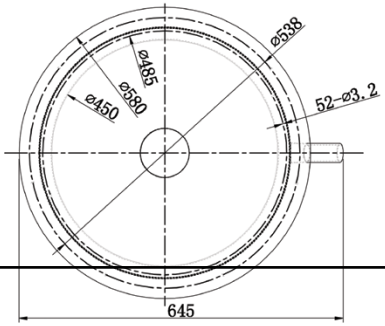

Front

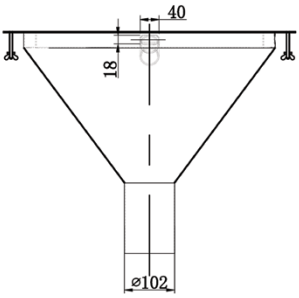

Side

